1. Turn Pet off and unplug power outlet.

2. Remove 2 screws holding cover to base. (see figure I).

FIGURE I

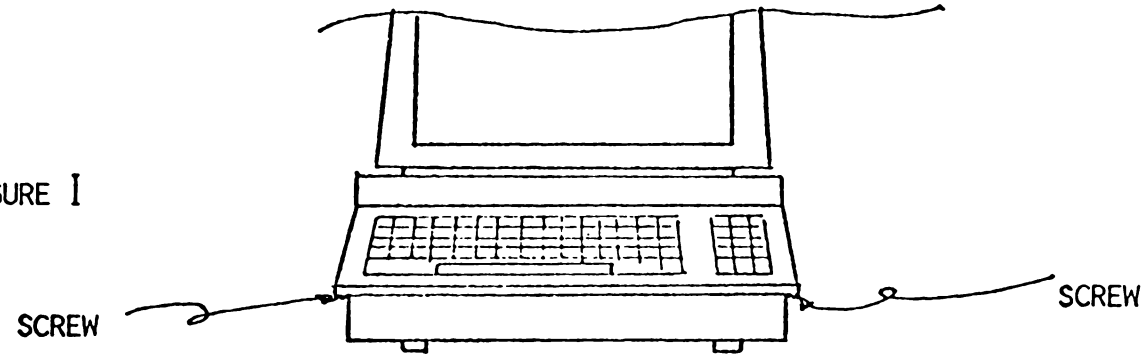

3. Assemble 4 standoffs with 4 phillips head screws, and set aside. (see figure II).

FIGURE II

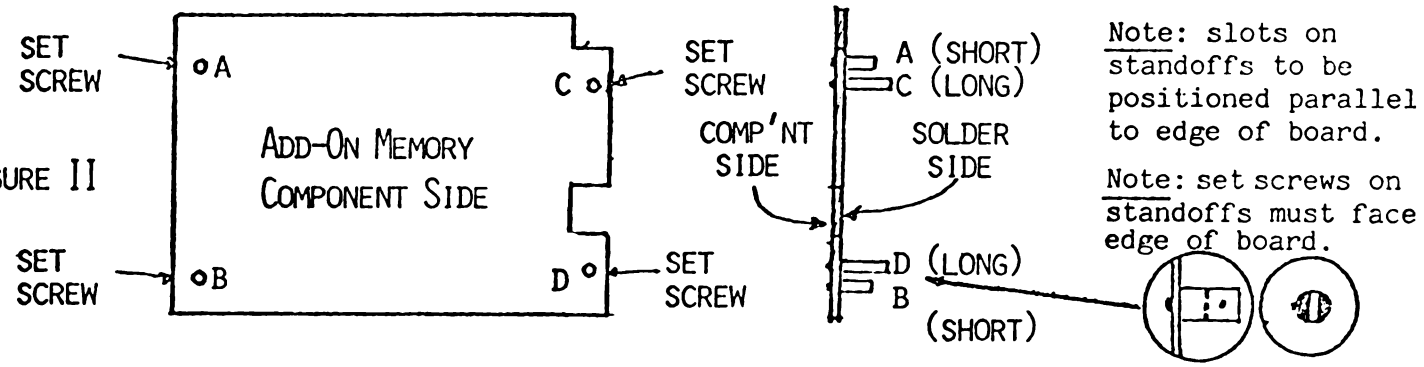

4. Using a small chisel head screwdriver, remove device 6502 MPU from position UB14 on the main CPU board. (save 6502)

5. Install flat ribbon cable into UB14 on main CPU board (replacing the removed 6502). Position cable such that it is facing front of computer.

6. Install long power harness to J11 on main CPU board. (note polarity). Position harness towards front of computer.

7. Install short harness to J10 on main CPU board. (note polarity).

8. Ascertain that the 3 cables are positioned towards front of computer.

9. Install the 64K memory add-on board over the main CPU board such that slotted side is on right hand side of computer.

10. Position standoffs such that, the 2 long ones straddle the edge of the computer base, while the 2 short ones straddle the main CPU board heat sink. (see figure III).

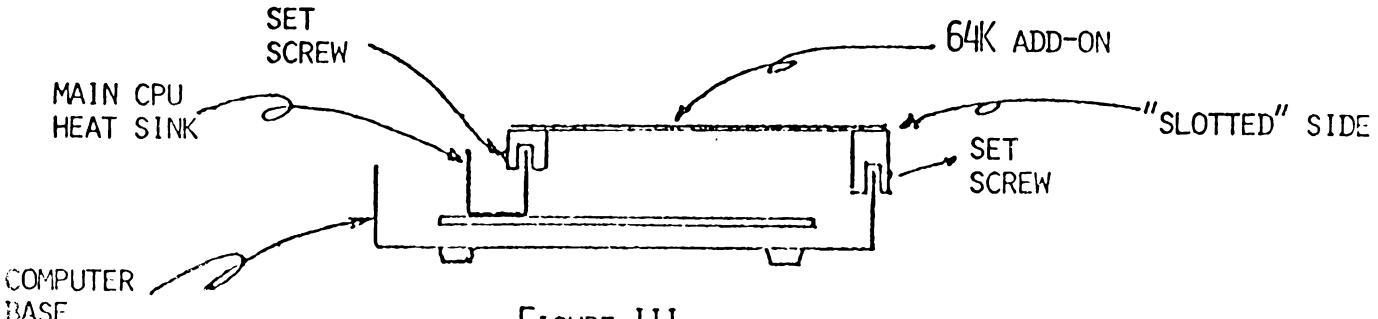

FIGURE III

11. With Allen wrench tool tighten 4 sets screws on standoffs to secure add-on board.

12. Connect flat ribbon cable to edge connector on 64K add-on board.

13. Connect the long power harness to J2 on 64K board.(note polarity).

14. Connect the short harness to J1 on the 64K board. (note polarity).

15. Loosen 4 standoff screws and adjust board to it's left most position, retighten 4 screws.

16. Close Pet cover & reinstall 2 screws to secure cover to base.

    Note: At times the inside of the cover may rub the edge of the board during opening and closing of the computer cover.

REVISIONS				
LTR	ZONE	DESCRIPTION	DATE	APPROVED
A		PRODUCTION RELEASE	3/5/81	[illegible]
B		REV PER ECO 2144	7/6/81	[illegible]

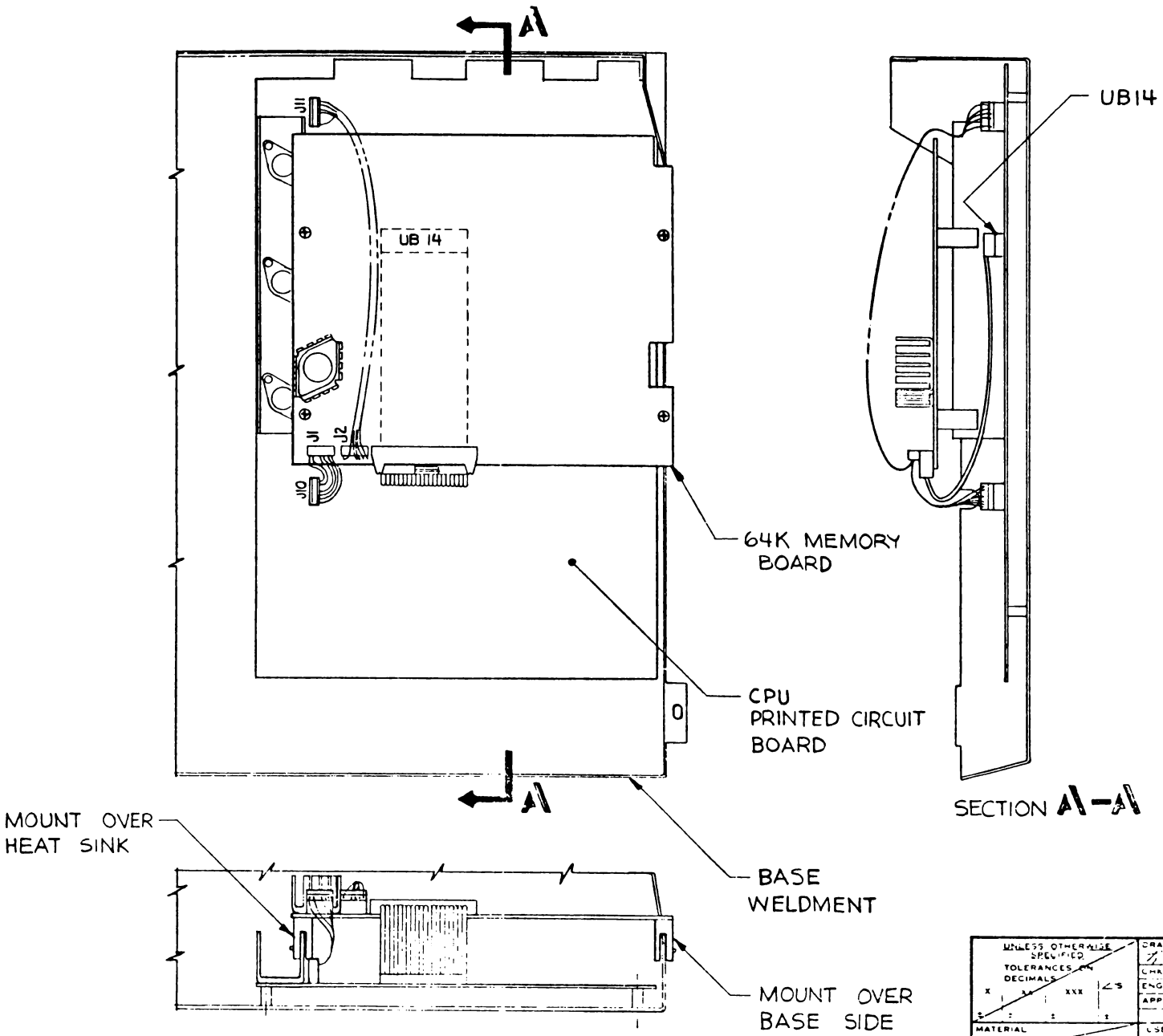

UNLESS OTHERWISE SPECIFIED TOLERANCES ON DECIMALS X XX XXX ∠S	DRAWN BY	DATE	commodore
	CHKD		INSTALLATION MEMORY, PET 64K
	ENGR		
	APPR		
MATERIAL	USED ON	NEXT ASSY	SIZE C 8032100 REV A
FINISH			SCALE 1/2 SHEET 1 OF 1

REVISIONS				
LTR	ZONE	DESCRIPTION	DATE	APPROVED

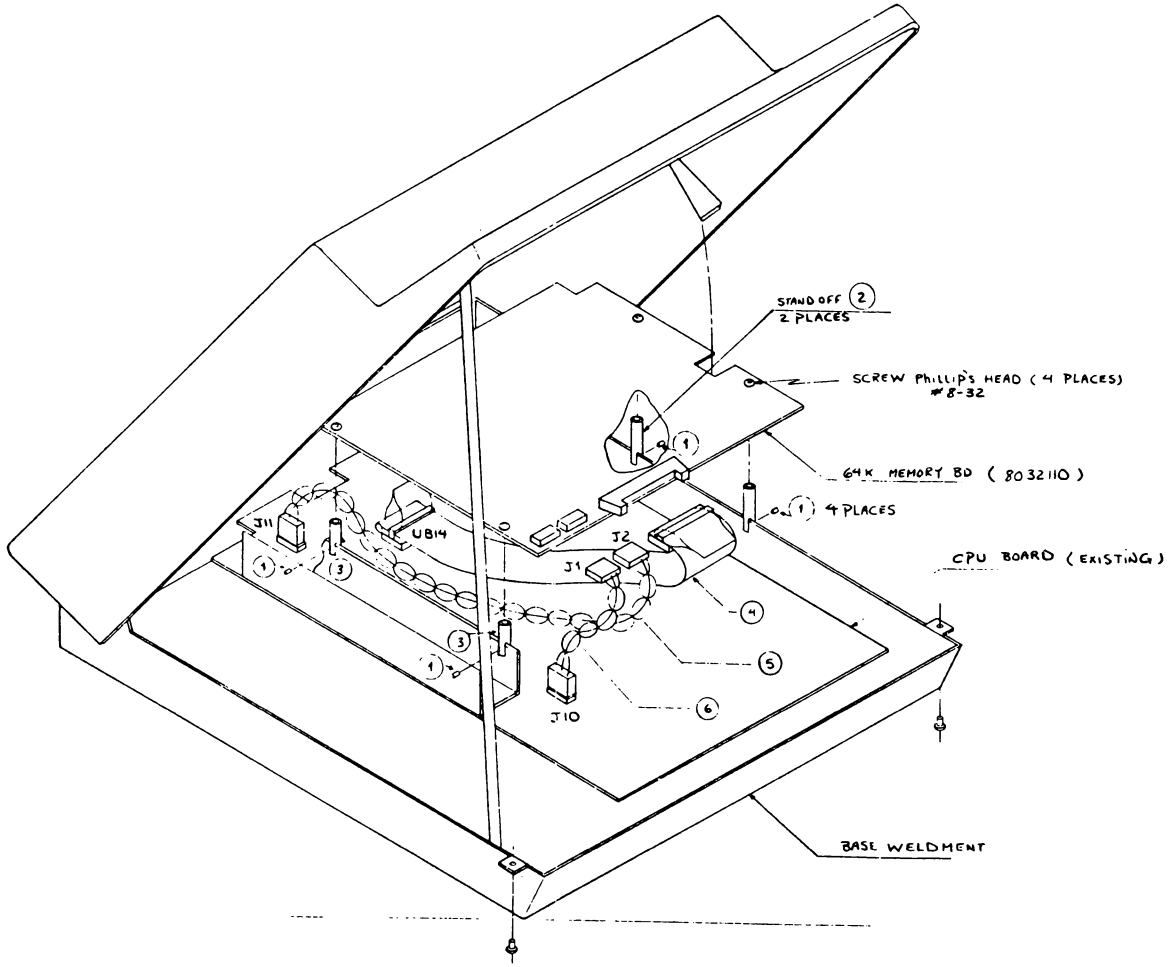

NOTES:

1. PART OF STANDOFFS
2. STAND OFF (P/N 907169-02) LENGTH 1.312 INCHES
3. STANDOFF (P/N 907169-01) LENGTH 1.062 INCHES
4. CABLE, FLAT RIBBON (P/N 8032096-01)
5. CABLE ASSY, HARNESS (LONG) (P/N 8032097-01) J2-J11
6. CABLE ASSY, HARNESS (SHORT) (P/N 8032098-01) J1-J10

UNLESS OTHERWISE SPEC'D TOLERANCES ON DECIMALS .XX ±.03 .XXX ±.010 ANGLES ±1°

DRAWN BY | DATE
CHKD
ENGR
APPR

MATERIAL
FINISH

USED ON | NEXT ASSY 8032112

commodore

PERSPECTIVE DRAWING

SIZE D | 8032100 | REV

SCALE NONE | SHEET 3 OF 4

ADVANCED DEMO

scanned by
steve gray